SELECTING THE PERFECT COMMERCIAL TABLE BASE AND TOP

A guided journey with questions to help you make confident, informed choices.

ZAP

STEP 1: DEFINE THE PURPOSE AND ENVIRONMENT

EVERY GREAT TABLE CHOICE STARTS WITH KNOWING WHERE AND HOW IT WILL BE USED

ASK YOURSELF...

1 Where will this table be used?

- Indoor areas
- Outdoor areas
- High-traffic areas
- Outdoor covered spaces
- Flexible-use areas
- •••

Outdoor furniture will require weather-resistant materials like aluminium or high-pressure laminate.

High-traffic environments will need durable, easy-clean surfaces and stable bases to prevent wobbling.

2 What kind of usage will it see?

- Dining
- Meeting
- Casual
- Drinks
- Formal
- •••

Dining tables should combine stability with easy maintenance, ensuring they hold up to frequent use and cleaning. In busy restaurants, solid bases and surfaces that support quick turnover help keep service smooth.

3 Will it need to be moved or stored often?

- Foldable
- Stackable
- Fixed
- Mobile
- Modular
- •••

THESE ANSWERS SHAPE EVERY DECISION THAT FOLLOWS.

STEP 2: CHOOSE THE RIGHT TABLE BASE

YOUR BASE DETERMINES STABILITY, STYLE, AND COMPATIBILITY WITH CHOSEN TABLE TOP AND SEATING

ASK YOURSELF...

1 What height do I need?

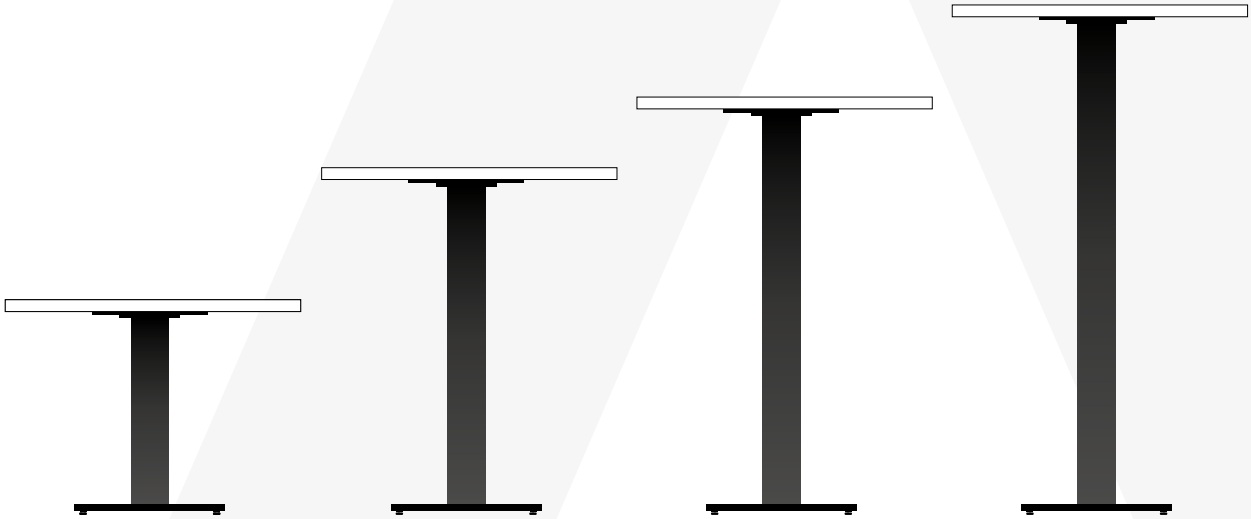

Type	Base Height	Typical Use
Coffee	43cm - 45cm	Casual lounge tables
Dining	71cm - 73cm	Standard dining tables
Mid	88cm	Counter height tables with mid-height stools, ideal for casual elevated dining
Poseur (Bar)	107cm - 108cm	High tables for standing or with bar-height stools

Consider the purpose behind each table, and how different heights will complement one another across the space. The right blend of heights not only supports comfort and function but also defines the character of your venue and the way people move through it.

2 What material suits the environment?

Will it face moisture, heat, or outdoor exposure?

Make sure you choose a table base that's manufactured from materials that are suited to your environment.

For indoor use, most types of bases will work, but you might want to consider something lightweight that's easy to move such as aluminium.

If you're using your tables outside, be sure to opt for a weather-resistant base made from materials such as aluminium, galvanised steel or polypropylene.

3 What style fits the space?

Single Pedestal with Square/Rectangular Plate

Double Pedestal with Rectangular Plate

Single Pedestal with Round Plate

Single Pedestal with Cross Base

Ornate

Trestle Legs

Cross Base

Four-Legged Base

Flip-Top

Commercial table bases are available in a wide range of shapes and style. Choose one that complements your environment, layout, and brand aesthetic. Often, round table tops will look better with a round base, and a square top with a square or rectangular base, but it's entirely up to you! It's also worth considering chair placement when selecting a base. Some styles - such as those with flat plate bases - make it easier for chairs to fit comfortably under tables without obstruction.

4 Do I need storage or mobility features?

- Nesting base
- Stackable design
- Modular Connection
- Adjustable Height
- •••

If space is paramount, or you need to be able to store your tables away when not in use, then you'll want to choose a base the allows the table to fold.

5 Explore the table bases options

Outdoor Indoor

	Model	Environment	Material	Heights Available, Base Sizes inc. Min/Max Table Top Sizes (cm) | Max. Top Weight	Colour Options
	Boston Sleek	Indoor	Steel	**Coffee, Dining, Mid-Height, Poseur** ▪ Small Square / Radius Max 70x70 / 80O | 30kg ▪ Small Round Max 80x80 / 90O | 30kg ▪ Large Square / Radius Max 90x90 / 100O | 45kg ▪ Large Round Max 100x100 / 120O | 45kg ▪ Small Rectangular Max 120x70 | 45kg ▪ Large Rectangular / Radius Max. 120x90 / 140x80 | 60kg ▪ Extra Large Round Max. 180O / 150x150 | 60kg (Fluted 45kg)	Available with round, square, or fluted columns. Radius - Round corners &edges. Radius bases are not compatible with Black & Gold columns.
	Chicago	Indoor	Cast Iron	**Dining, Poseur** ▪ Dining B1 Max. 70x70 / 70Ø | 25kg ▪ Dining B2 Max. 100x100 / 90Ø | 25kg ▪ Dining B3 Max. 120x090 / 140x80 | 25kg ▪ Poseur B1 Max. 70x70 / 70 | 25kg	●
	Alby	Outdoor Indoor	Aluminium	**Dining, Poseur** ▪ Dining Max. 80x80 / 80Ø | 12kg ▪ Dining Double Max 140x80 | 12kg ▪ Poseur Max 70x70 / 70Ø | 12kg	●
	Anzio	Outdoor Indoor	Aluminium	**Dining, Poseur** ▪ Small Dining Max 70x70 / 80Ø | 10kg ▪ Large Dining Max 80x80 / 90Ø | 15kg ▪ Large Rectangular Dining Max 140x80 | 25kg ▪ Small Poseur Max 70x70 / 70Ø | 10kg ▪ Large Poseur Max 80x80 / 80Ø | 15kg ▪ Large Rectangular Poseur Max 120x70 | 25kg	●
	Durance	Outdoor Indoor	Aluminium & Polypropylene	**Dining, Poseur** ▪ Dining Max 70x70 / 70Ø | 50kg ▪ Poseur Max 70x70 / 70Ø | 20kg	●
	Double Cross	Outdoor Indoor	Steel	**Dining** ▪ Dining Max 180x80 | 30kg	●
	Hula	Outdoor Indoor	Steel	**Dining** ▪ Dining Max 180x80 | 30kg	●
	Zaro	Outdoor Indoor	Aluminium	**Dining, Poseur** ▪ Small Dining Max 70x70 / 70Ø | 35kg ▪ Large Dining Max 80x80 / 80Ø | 35kg ▪ Large Poseur Max 70x70 / 70Ø | 35kg	●
	Lucio	Outdoor Indoor	Aluminium	**Dining** ▪ Dining Max 70x70 / 70Ø | 35kg	●

	Model	Environment	Material	Heights Available, Base Sizes inc. Min/Max Table Top Sizes (cm) | Max. Top Weight	Colour Options
	Hyde		Steel (Zinc primer and powde coated for external used)	**Dining** ▪ Dining Max 150Ø | 120kg	
	Nevada		Aluminium	**Dining** ▪ Dining Max 80x80 / 80Ø | 35kg ▪ Rectangular Dining Max 120x70 | ?kg	
	Orleans		Aluminium	**Dining, Poseur** ▪ Dining Max 70x70 / 70Ø | 20kg ▪ Large Dining Max 100x100 / 100Ø | 25kg ▪ Rectangular Dining Max 120x70 | 50kg ▪ Poseur Max 60x60 / 60Ø | 20kg	
	Quarto		Aluminium	**Coffee** ▪ Square Max 60x60 | 100kg ▪ Rectangular Max 120x70 | 110kg	
	Spaceguard		Aluminium	**Dining, Poseur** ▪ Dining Max 70x70 / 80Ø | 15kg ▪ Double Dining Max 120x80 | 20kg ▪ Poseur Max 60x60 / 70Ø | 15kg	
	Paris		Steel	**Dining, Mid-Height, Poseur** ▪ Small 60x60 | 100kg ▪ Medium 70x70 | 100kg ▪ Large 80x80 | 120kg ▪ Rectangular 120x70 | 120kg ▪ Rectangular 180x70 | 120kg	

6 When reviewing the options consider the maximum table top size and weight the base can support?

You need to ensure that the base you choose supports the size of the table top that you are planning to use.

A base that is too small risks instability and tipping, while one that is too large will appear disproportionate and reduce legroom and circulation space.

STEP 3: SELECT THE IDEAL TABLE TOP

THE TOP DEFINES THE SURFACE EXPERIENCE AND VISUAL IMPACT

ASK YOURSELF...

1 What material works best?

Outdoor Indoor

Material	Benefits	Suitable For
High Pressure Laminate (HPL)	▪ Scratch-resistant ▪ Versatile ▪ Wide range of colours/ patterns ▪ Hygienic and easy to clean ▪ Durable ▪ Decor range	
Melamine-Faced Chipboard (MFC)	▪ Lightweight ▪ Budget-friendly ▪ Smooth finish ▪ Available in many décor style ▪ UV and water resistant surface	
Laminate	▪ Cost-effective ▪ Easy to clean ▪ Consistent finish ▪ Durable ▪ Decor range	
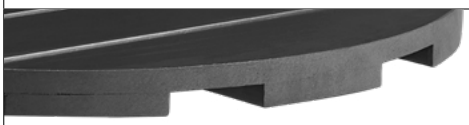 Recycled Plastic	▪ Sustainable ▪ Weather-resistant ▪ Durable ▪ Low maintenance	
Solid Wood	▪ Unique characteristics ▪ Warm ▪ Natural ▪ Durable ▪ Timeless appeal ▪ Can be refinished for longevity	
Marble	▪ Luxurious ▪ Premium aesthetic ▪ Heat-resistant ▪ Long-lasting ▪ Unique natural patterns ▪ Can be refinished for longevity	
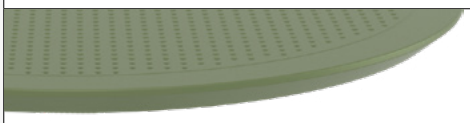 Polypropylene	▪ Lightweight ▪ Durable ▪ Weather-resistant ▪ Easy to clean ▪ Stackable ▪ Colour variety	

2 What shape and size do I need?

Small 2-person table

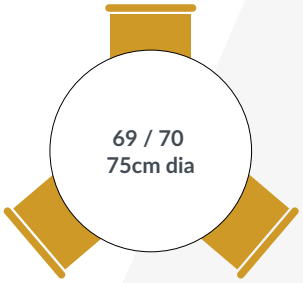

Standard 2-person table or small 3-person table

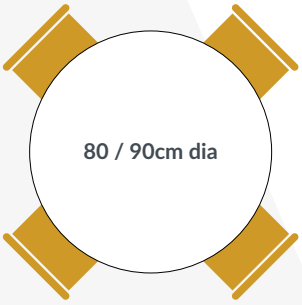

Standard 4-person table

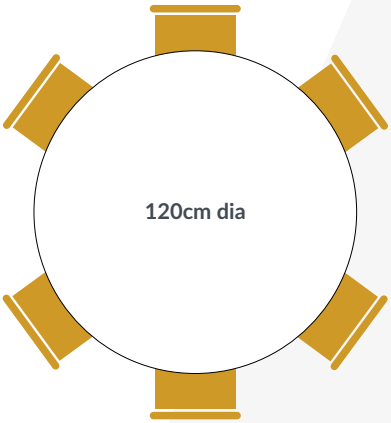

Standard 6-person table

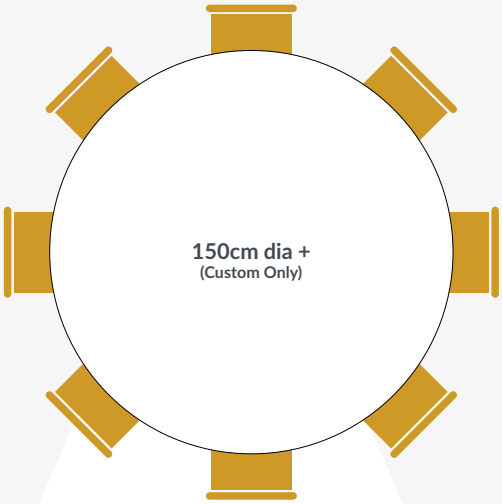

8+ person table

Small 2-person table

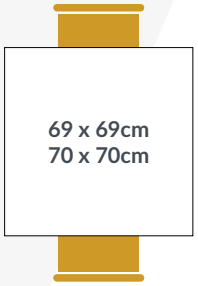

Standard 2-person table

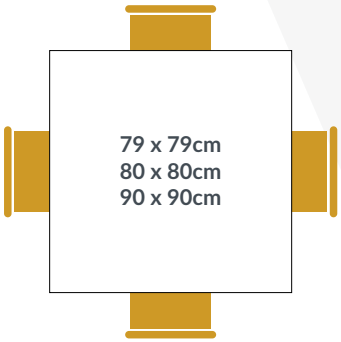

Standard 4-person table

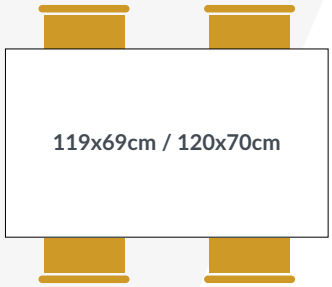

Standard 4-person table

Standard 6-person table. For 8-person table add one at either end

3 Explore the brands

EXTREMA TABLE TOPS

Built to withstand extreme conditions, both indoors and outside, Extrema Table Tops are manufactured from durable, weather-proof HPL in a wide variety of finishes and are resistant to UV light, heat, stains, and impacts.

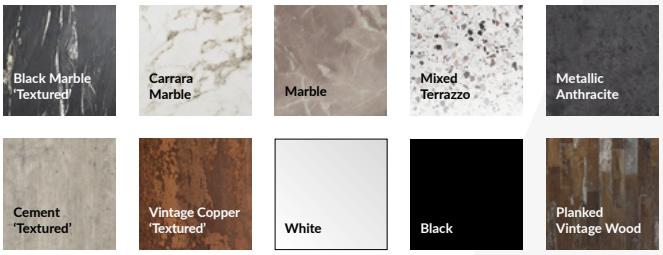

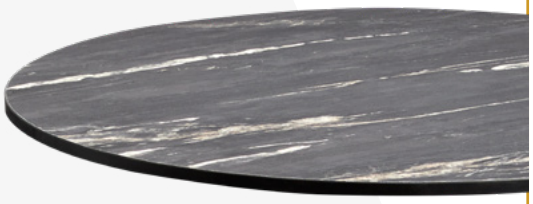

PARISIAN TABLE TOPS

French bistro-inspired tops that blend timeless elegance with exceptional resilience. With a bonded laminate surface and contoured metal outer rim, as well as resistance to heat, stains, and impacts.

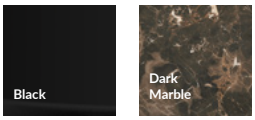

EKO TABLE TOPS

Modern and maintenance-free, EKO Table Tops look like wood, but are manufactured from 100% recycled materials that would have gone to landfill. Suitable for indoors and outside, they're weather and UV-resistant.

INSIGNIA TABLE TOPS

Crafted from high-quality Robinia wood, Insignia Table Tops are both beautiful and durable. Suitable for outdoor use, the tops feature an attractive slatted design and are available in a variety of shapes and sizes.

ENDURATOP TABLE TOPS

Weather and rot-proof Enduratop Table Tops offer great value, combining classic good looks with a lightweight yet durable design. They offer excellent resistant to heat, cigarette ash, scratching and staining.

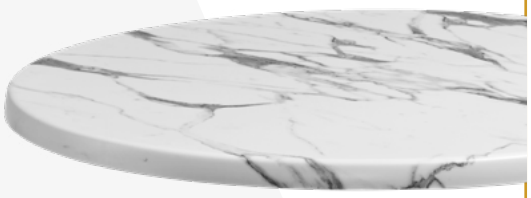

SOLIDGRAIN TABLE TOPS

Our comprehensive range of solid wood table tops includes oak, ash, and pine in an array of colours and finishes showcasing their unique characteristics. All beautifully crafted for indoor commercial use, the tops are highly durable and built to last.

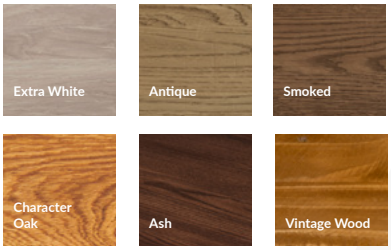

HOLZ TABLE TOPS

Highly durable yet cost-effective, Holz wood-effect table tops are crafted from MFC with 2mm ABS edging. The tops have an easy-clean, wipeable surface and are available in a range of naturally inspired shades.

OMEGA TABLE TOPS

Achieve a luxury marble look at a fraction of the cost. Featuring a thick, contract-grade marble effect laminate and attractive gold ABS edging, Omega Table Tops are heat-resistant and easy to keep clean.

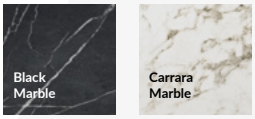

WHITE CARRARA MARBLE TABLE TOPS

Add the luxury of genuine marble with our White Carrara Marble Table Tops. Beautiful Italian Carrara marble, with a high-end matte finish is expertly crafted into smooth table tops with rounded edges and radius corners on the square version.

4 Explore the table top options

	Model	Environment	Material	Shapes	Colour / Finish Options
	Extrema		12mm HPL (High Pressure Laminate)		*Textured Finish
	Parisian		18/25mm Laminate and Metal Outer Ring		
	EKO		20mm Recycled Plastic		
	Insignia		22mm Robinia Wood		
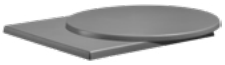	Enduratop		18/25mm Laminate		
	Rustic Solid Oak		32mm Solid Oak		Textured Surface
	Solid Character Oak		32mm Solid Oak		Smooth Surface
	Solid Ash		25mm Solid Ash		Smooth Surface
	Rustic Solid Pine Wood		32mm Solid Pine		Textured Surface
	Holz		25mm MFC (Melamine Faced Chipboard)		
	Omega		25mm Laminate and Gold ABS Edging		
	White Carrara Marble		20mm Genuine White Carrara Marble		

5 Weight & Compatibility

Choosing the right table isn't only about the look of the top - it's about ensuring the base and top work together safely and effectively. The weight of each top, shown in the comparison table below, should always be matched with a base that can support it.

- Always check that the base remains stable under the top's load.
- Matching weight and base design ensures durability and prevents wobbling.
- Compatibility between top and base makes installation smoother and extends the life

	Round						Square				Rectangular			
Available Table Sizes (cm)	**60**	**69/70**	**75**	**80**	**90**	**120**	**60x60**	**69x69/ 70x70**	**79x79/ 80x80**	**90x90**	**110x60**	**119x69/ 120x70**	**179x69/ 180x70**	**180x75**
Rustic Oak	6.4		11.47		15.5	27.6	9.4	12.45		20.5		20.55		32.65
Ash	7		8		15	22	7	10	12	15			23	
Character Oak	8		12		17	31	10	14		22		23		37
Rustic Pine	6		8		15	28	7	9	10	18		19	33	
Holz		8.78			14.51		6.45	8.78			11.82	15.05		
Omega	5	6		7			5	6	7			10		
Parisian	5	6.2												
Enduratop	5	6.2		7.8	9.5		6.6	9.2	11.5			15		
EKO		8.6		10.6	13.3	23.3		8.7	11.6	14.3		11.4	18.5	
Insignia	4	5		7			6	7	9			12	14	
Extrema	6.8	9.2			14.09	21.56	6.8	9.2	11.9			15.8	23.2	
White Carrara Marble	18	23					23	30						

Number in cells shows weight in kg of table tops

6 Fixings & Compatibility

Aligned fixings matter. Bolt patterns, brackets, and mounting methods all ensure stability and safety.

All our table bases come complete with fixings for secure and easy assembly.

When sold with a table top (except solid wood), the top is pre-drilled to match the base - making setup quick and effortless.

If purchased separately, tops may require drilling to suit your chosen base.

Consistent alignment means less downtime, faster installation, and peace of mind for busy hospitality venues.

EXTREMA EASYFIX SYSTEM

With our innovative EASYFIX system, Extrema table tops can be quickly and securely fitted onto a wide range of bases, offering a seamless installation experience.

It couldn't be easier to fix your new Extrema table top to your base:

- Place your pre-assembled table-base onto the table top, making sure that the holes align.
- Insert the 4 bolts into the grooves and slide them to the desired width.

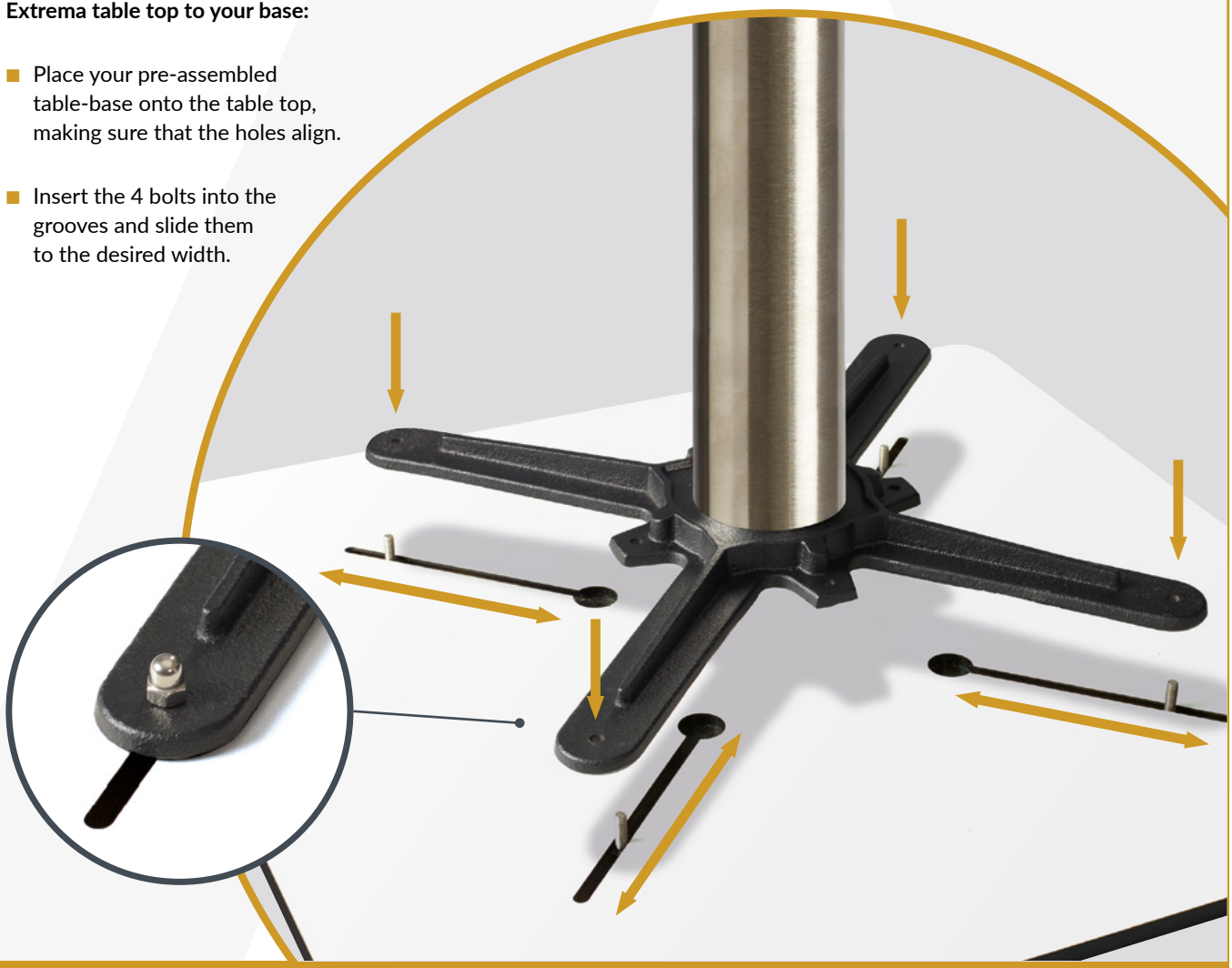

STEP 4: PAIRING BASE AND TOP SUCCESSFULLY

NOW BRING IT ALL TOGETHER TO COMPLETE YOUR VISION

FINALLY ASK YOURSELF...

1 Which top - and - base duo will you go for?

Here are just a few of our favourite combinations of tops and bases, from classic to contemporary and for indoor and outside...

INDOOR COMPLETE TABLES

Rustic Solid Oak Table Top in Smoked (120cm)

Boston Sleek Large Round Dining Height Base in Black/Gold

Omega Table Top in White (80x80cm)

Chicago B2 Dining Height Base in Black

Parisian Table Top in Black (70cm)

Nevada Dining Height Base in Black

OUTDOOR COMPLETE TABLES

Extrema Table Top in Cement (120x70cm)

Spaceguard Black Double Dining Flip Top Base

EKO Table Top in Black (80cm)

Zaro Trumpet Style Black Large Dining Height Base

Insignia Table Top (80x80cm)

Paris Square Black Dining Table Base (77.5x77.5cm)

2 Is this setup future-proof? Can I swap tops or adjust heights later?

Tables aren't just about today's needs - they should adapt as your venue evolves. Consider whether bases allow you to swap tops for a fresh look or different function, and whether adjustable heights can give you flexibility between dining, lounge, or bar service.

Choosing adaptable designs helps ensure your investment keeps pace with changing layouts, guest expectations, and service styles.

3 Will this be easy to clean and maintain over time?

- **Stain-resistant finishes work well in cafés, bars, and high-turnover dining spaces.**
- **Durable bases resist scuffs and scratches from chairs and foot traffic.**
- **Low-maintenance materials like recycled plastic, HPL, or polypropylene suit busy outdoor areas.**
- **Premium finishes such as marble or solid wood add elegance but need regular care.**
- **Easy-clean surfaces keep service efficient, while low-maintenance choices reduce long-term costs and staff effort.**

- Easy-clean surfaces keep turnover fast and service efficient.
- Choosing low-maintenance materials reduces long-term costs and staff effort.
- Premium materials like marble or wood elevate the look but require more upkeep - balance style with practicality.

Take a look at our Care and Maintenance Guide at zaptrading.co.uk/care-maintenance

STILL NEED SOME HELP?

Whether you're specifying for a single venue or a multi-site rollout, our team is here to help.

They can also help with layout planning or volume pricing.

EMAIL: sales@zaptrading.co.uk

PHONE: 0345 073 8455

WEBSITE: zaptrading.co.uk

ZAP